MITCH Midi Switch Schematics
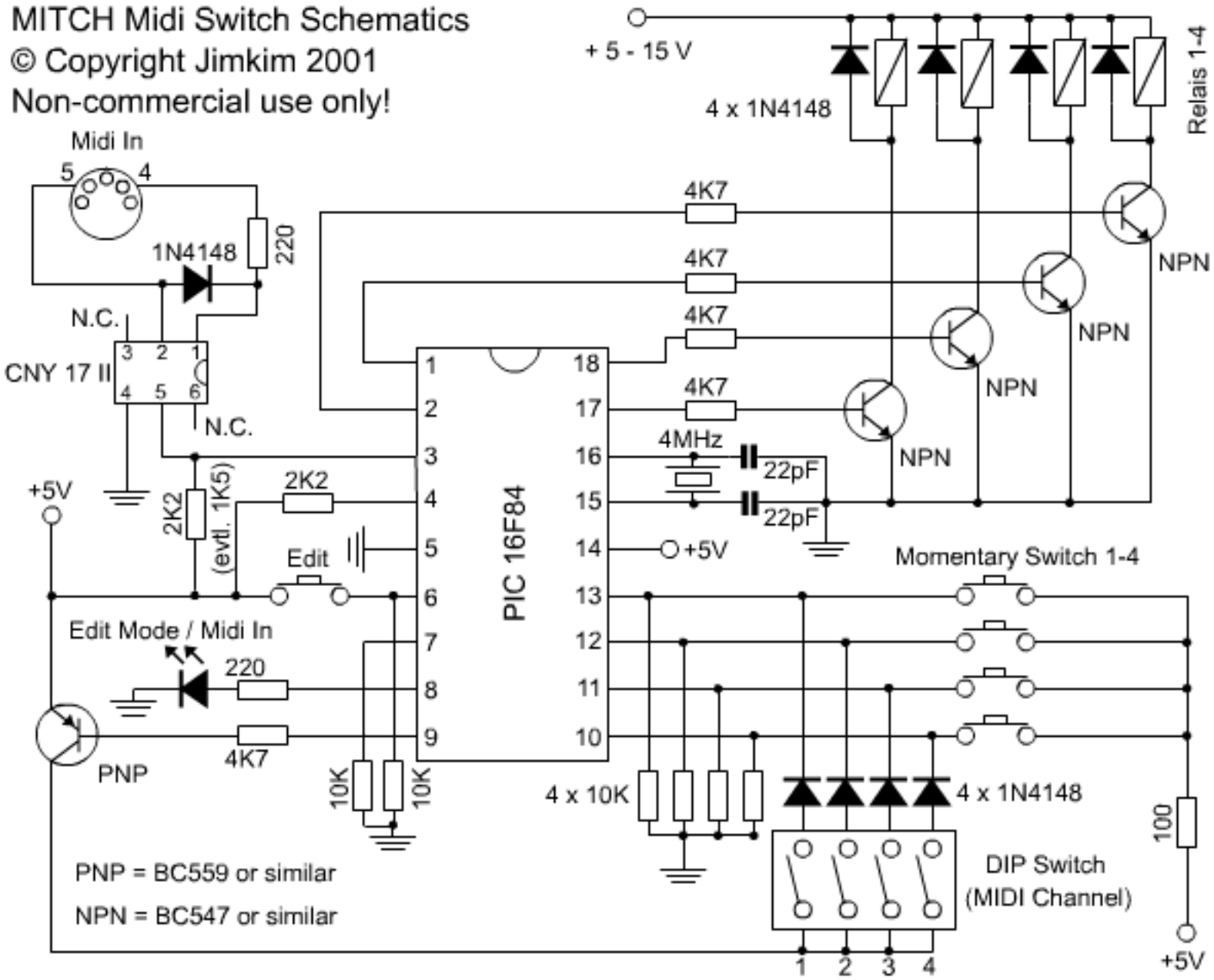
© Copyright Jimkim 2001
Non-commercial use only!